WILLBRANDT **Rubber Expansion Joint Type 50**

■ **mainly in stock**

DN 20 to DN 1000

Type 50 is a low corrugated, highly elastic rubber expansion joint that achieves minimal flow resistance due to its flat corrugation. It reduces structure-borne noise to a high degree and is characterised by its high movement absorption in all directions. Due to the wide variety of rubber qualities, a suitable rubber compound is available for every application (see material descriptions on the following page).

Type 50 is used in building technology, plant engineering, water and wastewater technology, engine construction, shipbuilding and solar and wind energy plant construction. Here it is used specifically to absorb movement and vibrations and to dampen noise.

Bellow design

Low corrugated rubber bellow with reinforcement and shaped sealing bead with core ring, self-sealing (no additional seals required). Suitable for swiveling flanges.

Flange version

Both sides with swiveling flange made of galvanized steel, drilled according to DIN PN 10 (standard). Other materials and dimensions are possible.

Approvals/Conformity

CE, drinking water conform, shipbuilding approvals, TÜV tested in accordance with DIN 4809 (Detailed overview on page 5.)

Vacuum resistance

- DN 20 to 50 vacuum-proof
- DN 65 to 250 up to -200 mbar
- DN 300 to 1000 not vacuum-proof
- with vacuum supporting spiral/ring from DN 65 to DN 1000 vacuum-proof
- Type 50 blue-red PN 10: DN 20 to DN 40 up to -300 mbar from DN 50 can only used with vacuum supporting spiral for vacuum

Accessories

- Tie rods
- Vacuum supporting spiral/rings
- Guide sleeves
- PTFE lining (see type 50 PTFE on page 43)
- Potential equalisation
- Flame-resistant protective covers
- Dust and splash protection covers
- Earth cover / sun protection cover

Further information on page 99 - 105.

Specifications for DN 20 - DN 400

Bellow		Bellow design			up to DN	Permissible operating data									Surface resistance Ro	
Colour code	Colour marking	Core (inner)	Rein-forcement	Decke (außen)		°C	bar	°C	bar	°C	bar	°C	bar	Short term °C	Core	Cover
blue-red		IIR	Polyamide	EPDM	400	-40	10	50	16	70	12	100	10	120	dissipative	dissipative
blue-red PN 10*		IIR	Polyamide	EPDM	150	-40	10	50	10	70	8	90	6	120	dissipative	dissipative
red KTW		CIIR	Polyester	CIIR	400	-40	10	50	16	70	12	100	10	120	dissipative	dissipative
red Sp		EPDM	PEEK	EPDM	400	-40	10	70	16	100	10	130	8	150	dissipative	dissipative
black CR	-	CR	Polyamide	CR	400	-25	10	50	16	70	12	90	10	100	insulating	insulating
yellow		NBR	Polyamide	CR	400	-20	10	50	16	70	12	90	10	100	conductive	conductive
yellow LT	LT	NBR-LT	Polyamide	CR	300	-40	10	50	16	70	12	90	10	100	dissipative	conductive
yellow St		NBR	Steel cord	CR	400	-20	10	60	16	70	12	90	10	100	conductive	insulating
yellow HNBR		HNBR	Steel cord	CR	300	-35	10	60	16	70	12	100	10	120	dissipative	insulating
orange		NBR	Polyamide	CR	200	-20	10	50	25	70	20	90	15	100	conductive	conductive
green		CSM	Polyamide	CSM	400	-20	10	50	16	70	12	100	10	110	insulating	insulating

Bursting pressure DN 20 - DN 400 > 48 bar
* Bursting pressure max. 30 bar, max. DN 150

For pressure loss see technical appendix.

Important information

The expansion joints are designed for connection to a flange in accordance with EN 1092-1, form A/B, type 11. If the flange dimensions or surface finish differ from this, additional measures must be taken, such as installing an adapter disc (see also table „Rubber bellow sealing profiles“ on page 125).

WILLBRANDT **Rubber Expansion Joint Type 50**

Specifications for DN 450 - DN 1000

Bellow		Bellow design			up to DN	Permissible operating data									Surface resistance Ro	
Colour code	Colour marking	Core (inner)	Rein-forcement	Cover (outer)		°C	bar	°C	bar	°C	bar	°C	bar	Short term °C	Core	Cover
blue-red		IIR	Polyamide	EPDM	1000	-40	8	50	10	70	8	100	6	120	dissipative	dissipative
red KTW		CIIR	Polyester	CIIR	1000	-40	8	50	10	70	8	100	6	120	dissipative	dissipative
red Sp		EPDM	PEEK	EPDM	1000	-40	8	70	10	100	7,5	130	6	150	dissipative	dissipative
yellow	–	CR	Polyamide	CR	1000	-25	8	50	10	70	8	90	6	100	insulating	insulating
yellow St		NBR	Polyamide	CR	1000	-20	8	50	10	70	8	90	6	100	conductive	conductive
green		NBR	Steel cord	CR	600	-20	8	60	10	70	8	90	6	100	conductive	insulating
black CR		CSM	Polyamide	CSM	1000	-20	8	50	10	70	8	100	6	110	insulating	insulating

Bursting pressure DN 450 - 1000 > 30 bar

For pressure loss see technical appendix.

Application

Type 50 blue-red
For drinking water (WRAS conform), hot water, sea water, cooling water with glycol or other chemical additives for treating water, weak acids and weak alkalis and salt solutions, technical alcohols, esters, ketones. Electrically dissipative surface. Not suitable for oil products or cooling water with additives containing oil.

Type 50 blue-red PN 10
Like type 50 blue-red, but max.10 bar operating pressure.

Type 50 red KTW
Like type 50 blue-red, but KTW-BWGL conform instead of WRAS (drinking water).

Type 50 red Sp
For heating installations according to DIN 4809. For many years of operation under constant loading with hot water and heating water at 100 °C/110 °C at 10 bar/6 bar operating pressure. Electrically dissipative surface. Not suitable for media with additives containing oil.

Type 50 black CR
For cold and hot water, swimming pool water, salt water, wastewater, cooling water with coolant (e.g. glycol up to 60 °C) and anti-corrosive products containing oil, oil mixtures and compressed air containing oil. Electrically insulating surface.

Type 50 yellow
For oils, lubricants, fuels, gases, city and natural gas (not liquefied) and DIN EN fuels with an aromatic content up to 50 %. Electrically conductive surface.

Type 50 yellow LT
Like type 50 yellow, but also for liquid gas. Electrically dissipate inner surface and electrically conductive outer surface.

Type 50 yellow St
Like type 50 yellow with additional flame-resistance for up to 30 minutes at 800 °C. Electrically conductive inner surface and electrically insulating outer surface.

Type 50 yellow HNBR
Like type 50 yellow St, but for temperatures up to +100 °C. Electrically dissipative inner surface and electrically insulating outer surface.

Type 50 orange
Like type 50 yellow, but for 25 bar operating pressure und for liquid petroleum gas acc. to DIN EN 589. Electrically conductive surface.

Type 50 green
For chemicals, aggressive chemical wastewater and compressor air containing oil. Electrically insulating surface.

Important information

The expansion joints are designed for connection to a flange in accordance with EN 1092-1, form A/B, type 11. If the flange dimensions or surface finish differ from this, additional measures must be taken, such as installing an adapter disc (see also table „Rubber bellow sealing profiles“ on page 125). For aggressive media, please have the material resistance checked by our engineers. The bellows must not be painted or insulated at media temperatures >50 °C. Please also note the planning and installation instructions.

WILLBRANDT **Rubber Expansion Joint Type 50**

Design A - without tie rods

Can be used for absorb movements in all directions (for combined movements, refer to the movement diagram in the technical appendix), for vibration and noise damping.

The expansion joint's reaction force must be absorbed through appropriate pipeline guidance (see planning instructions in the appendix).

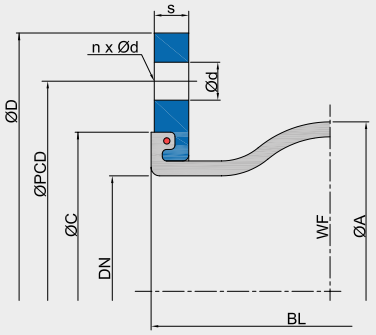

axial -

axial +

lateral ±

angular ±

Dimensions for design A

DN	Length	Bellow		Flange PN 10*2						Movement absorption*3 (polyamide cord)				Movement absorption*3 (steel cord)				Weight*4
	BL	ØA	WF*1	ØD	ØPCD	Ød	n	s	ØC	axial +	axial -	lateral ±	angular ±	axial +	axial -	lateral ±	angular ±	
	mm	mm	mm²	mm	mm	mm		mm	mm	mm	mm	mm	∠°	mm	mm	mm	∠°	kg
*5**20**	**130**	81	1700	105	75	M12	4	14	66	30	30	30	30	15	30	15	20	1.6
25	**130**	81	1700	115	85	14	4	14	66	30	30	30	30	15	30	15	20	1.8
32	**130**	81	1700	140	100	18	4	15	66	30	30	30	30	15	30	15	20	2.9
40	**130**	86	1800	150	110	18	4	15	74	30	30	30	30	15	30	15	20	3.4
50	**130**	96	3200	165	125	18	4	16	86	30	30	30	30	15	30	15	20	4.5
65	**130**	111	5300	185	145	18	8	16	106	30	30	30	30	15	30	15	20	5.2
80	**130**	122	8500	200	160	18	8	18	118	30	30	30	30	15	30	15	20	6.6
100	**130**	142	12800	220	180	18	8	18	138	30	30	30	20	15	30	15	15	7.6
125	**130**	168	18700	250	210	18	8	18	166	30	30	30	20	15	30	15	15	9.4
150	**130**	192	25900	285	240	22	8	18	192	30	30	30	20	15	30	15	15	11.7
200	**130**	252	41000	340	295	22	8	20	252	30	30	30	10	20	15	10	15	16.0
250	**130**	302	59600	395	350	22	12	20	304	30	20	20	5	20	15	10	15	18.7
300	**130**	354	82200	445	400	22	12	22	354	30	20	20	5	20	15	10	15	24.2
350	**200**	420	117600	505	460	22	16	24	412	35	50	30	8	30	30	25	10	40.0
400	**200**	480	154700	565	515	26	16	25	470	35	50	30	8	30	40	25	15	45.6
450	**200**	530	204200	615	565	26	20	28	520	35	50	30	8	-	-	-	-	57.0
500	**200**	580	227900	670	620	26	20	30	570	35	50	30	8	-	-	-	-	67.4
600	**200**	680	311500	780	725	30	20	30	675	35	40	30	8	-	-	-	-	81.3
700	*6**250**	800	434200	895	840	30	24	35	780	40	30	30	5	-	-	-	-	121.7
800	**250**	880	527400	1015	950	33	24	40	887	35	40	35	5	-	-	-	-	159.7
900	**300**	1038	737900	1115	1050	33	28	40	987	40	40	40	5	-	-	-	-	197.0
1000	**300**	1138	889400	1230	1160	36	28	40	1087	40	40	40	5	-	-	-	-	237.0

*1 WF = effective area
*2 Other standards/dimensions possible.
*3 Utilisation rate of movement absorption decreases at higher temperatures (see technical appendix).
*4 Approx. weights with reinforcement from polyamide cord, with steel cord approx. + 3 - 7 %.
*5 Flange with threaded holes
*6 Building length 260 mm

Important information

Please note the appropriate fixed point constructions and plain bearings in your piping system! Information on this can be found in our planning and installation instructions. Regarding the bracing, please refer to the information in the technical appendix (page 99 - 102)!

WILLBRANDT **Rubber Expansion Joint Type 50**

Bracings

A selection of different bracings are available to absorb the reaction force and to protect the bellows from overstretching or excessive compression.

Design B*
Tie rods, mounted in rubber bushing

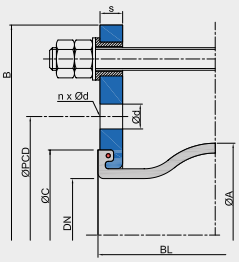

Design C*
Tie rods, mounted in rubber bushing, inside with thrust limiter (plastic bushing)

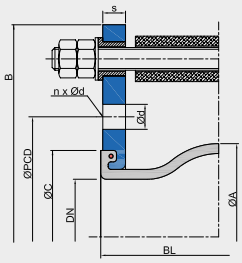

Design E
Tie rods, outside with spherical washers/conical sockets

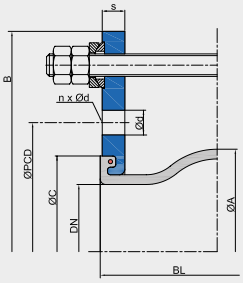

Design M
Tie rods, inside and outside with spherical washers/conical sockets

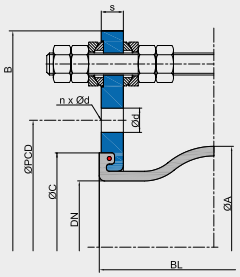

Design S
Tie rods, outside with limiters spherical washers/conical sockets, inside with thrust limiters (plastic bushing)

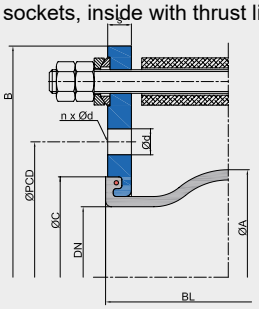

Design F
Hinge

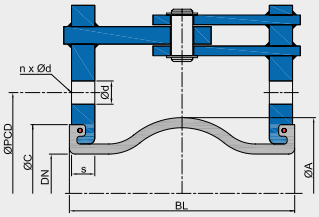

* Note: Design B and C only up to DN 200 PN 10. The lateral movement absorption is reduced by around 50 %.

Flange dimensions for designs with tie rods

DN	Length BL	Flange PN 10 (example dimensions) B	ØD	ØPCD	Ød	n	s	ØC
	mm	mm	mm	mm	mm		mm	mm
20	**130**	189	105	75	M12	4	14	66
25	**130**	205	115	85	14	4	14	66
32	**130**	230	140	100	18	4	15	66
40	**130**	240	150	110	18	4	15	74
50	**130**	255	165	125	18	4	16	86
65	**130**	275	185	145	18	8	16	106
80	**130**	290	200	160	18	8	18	118
100	**130**	310	220	180	18	8	18	138
125	**130**	340	250	210	18	8	18	166
150	**130**	375	285	240	22	8	18	192
200	**130**	440	340	295	22	8	20	252
250	**130**	509	395	350	22	12	20	304
300	**130**	559	445	400	22	12	22	354
350	**200**	619	505	460	22	16	24	412
400	**200**	700	565	515	26	16	25	470
450	**200**	760	615	565	26	20	30	520
500	**200**	810	670	620	26	20	30	570
600	**200**	930	780	725	30	20	30	675
700	***250**	1045	895	840	30	24	35	780
800	**250**	1175	1015	950	33	24	40	887
900	**300**	1285	1115	1050	33	28	40	987
1000	**300**	1400	1230	1160	36	28	40	1087

* Building length 260 mm

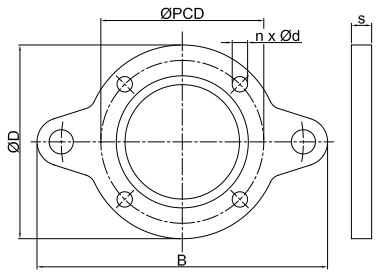

DN 20 - 200

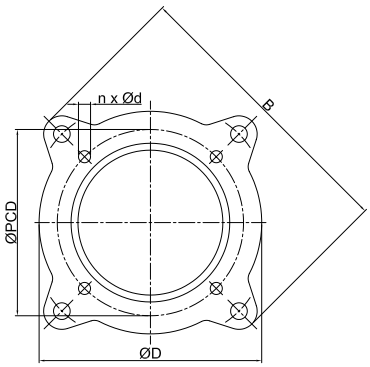

DN 250 - 900

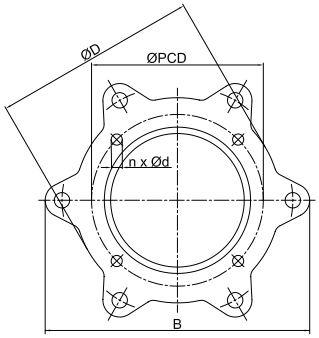

DN 1000

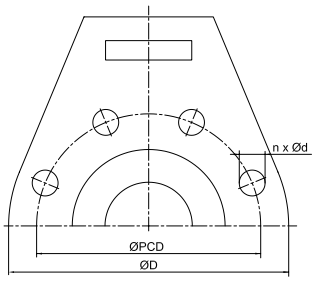

DN 50 - 1000 (Design F)

WILLBRANDT **Rubber Expansion Joint Type 50**

Axial stiffness rates

DN	Length BL mm	Stiffness rates (averages value from full way) 0 bar N/mm	2,5 bar N/mm	4 bar N/mm	6 bar N/mm	10 bar N/mm	16 bar N/mm
20	**130**	31	68	128	192	243	270
25	**130**	31	68	128	192	243	270
32	**130**	31	68	128	192	243	270
40	**130**	30	66	124	186	236	261
50	**130**	25	51	98	134	173	192
65	**130**	24	53	100	150	190	211
80	**130**	28	58	104	148	185	205
100	**130**	35	71	116	206	274	304
125	**130**	36	71	137	214	282	313
150	**130**	49	102	189	293	390	433
200	**130**	100	180	365	568	735	816
250	**130**	105	207	388	609	778	864
300	**130**	123	248	448	658	883	980
350	**200**	105	177	349	567	753	836
400	**200**	154	261	516	535	1090	1210
450	**200**	167	320	581	903	1162	-
500	**200**	196	376	686	1060	1364	-
600	**200**	208	292	692	1123	1441	-
700	***250**	140	198	521	714	954	-
800	**250**	180	270	594	975	1258	-
900	**300**	200	380	690	1080	1395	-
1000	**300**	225	420	742	1248	1568	-

* Building length 260 mm

Warning: Deviations (+/- 25 %) in the stiffness rates may occur due to use of different materials and manufacturing processes.

Lateral stiffness rates

DN	Length BL mm	Stiffness rates (averages value from full way) 0 bar N/mm	2,5 bar N/mm	4 bar N/mm	6 bar N/mm	10 bar N/mm	16 bar N/mm
20	**130**	64	125	184	240	240	300
25	**130**	64	125	184	240	240	300
32	**130**	64	125	184	240	240	300
40	**130**	62	121	178	233	256	291
50	**130**	50	65	80	105	145	205
65	**130**	40	78	115	150	165	188
80	**130**	35	74	136	155	173	200
100	**130**	55	88	143	168	192	228
125	**130**	100	200	261	293	383	518
150	**130**	120	260	309	366	466	616
200	**130**	323	723	836	949	1219	1624
250	**130**	379	806	1022	1173	1479	1938
300	**130**	392	837	1068	1216	1542	2031
350	**200**	305	610	762	875	1098	1433
400	**200**	338	642	817	946	1199	1579
450	**200**	342	639	821	971	1200	-
500	**200**	426	818	1048	1204	1495	-
600	**200**	456	834	1062	1295	1586	-
700	***250**	516	939	1191	1449	1775	-
800	**250**	558	960	1055	1557	1758	-
900	**300**	800	1480	1984	2248	2560	-
1000	**300**	960	1824	2361	2736	2976	-

* Building length 260 mm

Warning: Deviations (+/- 25 %) in the stiffness rates may occur due to use of different materials and manufacturing processes.

WILLBRANDT **Rubber Expansion Joint Type 50**

Angular stiffness torque

DN	Length BL mm	Stiffness torque (averages value from full way) 0 bar Nm/°	2,5 bar Nm/°	4 bar Nm/°	6 bar Nm/°	10 bar Nm/°	16 bar Nm/°
20	130	0.2	0.5	0.9	1.3	1.7	1.9
25	130	0.2	0.5	0.9	1.3	1.7	1.9
32	130	0.2	0.5	0.9	1.3	1.7	1.9
40	130	0.3	0.6	1.1	1.6	2.0	2.3
50	130	0.3	0.6	1.1	1.6	2.0	2.2
65	130	0.4	0.9	1.7	2.5	3.2	3.6
80	130	1.0	1.0	2.0	3.0	4.0	5.0
100	130	1.0	2.0	4.0	7.0	9.0	10.0
125	130	2.0	3.0	6.0	10.0	13.0	15.0
150	130	3.0	7.0	12.0	19.0	25.0	28.0
200	130	11.0	20.0	41.0	63.0	82.0	91.0
250	130	18.0	35.0	65.0	102.0	130.0	144.0
300	130	29.0	58.0	105.0	154.0	206.0	229.0
350	200	34.0	57.0	113.0	183.0	244.0	270.0
400	200	65.0	110.0	218.0	226.0	460.0	511.0
450	200	87.0	168.0	304.0	473.0	609.0	-
500	200	125.0	239.0	436.0	674.0	868.0	-
600	200	186.0	261.0	618.0	1004.0	1288.0	-
700	*250	167.0	237.0	861.0	853.0	1140.0	-
800	250	277.0	416.0	914.0	1501.0	1937.0	-
900	300	386.0	733.0	1330.0	2082.0	2689.0	-
1000	300	531.0	991.0	1751.0	2945.0	3700.0	-

* Building length 260 m

Warning: Deviations (+/- 25 %) in the stiffness torque may occur due to use of different materials and manufacturing processes.

Frictional force

DN	Length BL mm	For designs E and M Frictional force N/bar	For design F Frictional torque Nm/bar
20	130	7	0.2
25	130	7	0.2
32	130	7	0.2
40	130	7	0.2
50	130	12	0.3
65	130	20	0.5
80	130	35	1.0
100	130	51	1.4
125	130	75	2.1
150	130	118	4.4
200	130	167	6.2
250	130	243	11.2
300	130	335	15.4
350	200	120	17.0
400	200	160	22.9
450	200	171	40.5
500	200	266	63.5
600	200	634	138.5
700	*250	662	180.9
800	250	896	326.2
900	250	1105	402.4
1000	250	1357	617.3

* Building length 260 m

Warning: Deviations (+/- 25 %) in the frictional force/torque may occur due to use of different materials and manufacturing processes.

WILLBRANDT **Chemical Expansion Joint Type 50 PTFE**

■ **not in stock**

DN 25 to DN 500

Type 50 PTFE is a low corrugated rubber expansion joint lined with PTFE. Its low corrugation minimises flow resistance. The PTFE lining gives the expansion joint good anti-adhesive properties and is chemically resistant.

The PTFE lining can be used with any type 50 rubber compound. However, it is important to ensure that the selected rubber compound achieves the highest possible resistance to the medium, as this is the only way to achieve an optimum service life.

Dimensions for design A

DN*1	Length	Bellow		Flange PN 10*3						Movement absorption				Weight
	BL	ØA	WF*2	ØD	ØLK	Ød	n	s	ØC	axial +	axial -	lateral ±	angular ±	
	mm	mm	mm²	mm	mm	mm		mm	mm	mm	mm	mm	∠°	kg
25	**130**	81	1700	115	85	14	4	14	66	15	15	15	15	1.9
32	**130**	81	1700	140	100	18	4	15	66	15	15	15	15	3.1
40	**130**	86	1800	150	110	18	4	15	74	15	15	15	15	3.5
50	**130**	96	3200	165	125	18	4	16	86	15	15	15	15	3.8
65	**130**	111	5300	185	145	18	8	16	106	15	15	15	15	5.4
80	**130**	122	8500	200	160	18	8	18	118	15	15	15	15	6.9
100	**130**	142	12800	220	180	18	8	18	138	15	15	15	10	8.0
125	**130**	168	18700	250	210	18	8	18	166	15	15	15	10	9.7
150	**130**	192	25900	285	240	22	8	20	192	15	15	15	10	13.1
200	**130**	252	41000	340	295	22	8	20	252	15	15	15	6	16.4
250	**130**	302	59600	395	350	22	12	20	304	15	15	15	6	21.7
300	**130**	354	82200	445	400	22	12	20	354	15	15	15	6	24.8
350	**200**	420	117600	505	460	22	16	24	412	15	15	15	4	38.8
400	**200**	480	154700	565	515	26	16	25	470	15	15	15	4	38.6
450	**200**	530	204200	615	565	26	20	28	520	15	15	15	4	49.3
500	**200**	580	227900	670	620	26	20	30	570	15	15	15	4	57.2
600	**200**	680	311500	780	725	30	20	30	675	17	20	15	4	76.0
*4**700**	**250**	800	434200	895	840	30	24	35	780	20	15	15	3	129.0

*1 For larger nominal diameters, feasibility must be checked.
*2 WF = effective area
*3 Other standards/dimensions possible.
*4 Building length 260 mm

Pressure resistance	Max. 6 bar operating pressure with polyamide cord reinforcement, max. 9 bar operating pressure with aramid or steel cord reinforcement.
Conformity	FDA and EG 1935/2004 (Detailed overview on page 5.)
Vacuum resistance	Only limited suitable for vacuum operation. A PTFE vacuum supporting ring, which allows full vacuum for small nominal diameters, can be used from DN 50. The PTFE supporting ring can only be used up to 50 °C. DN 25, DN 32, DN 40 and DN 350 expansion joints are not suitable for vacuum operation.

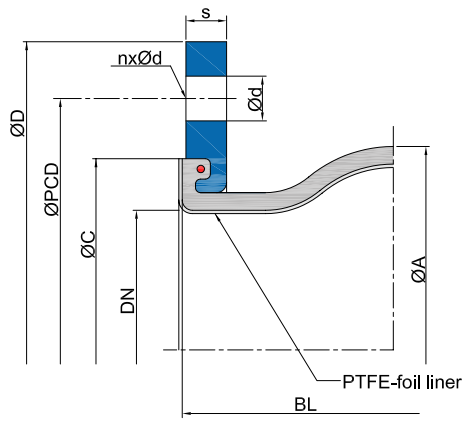

Important information

The expansion joints are designed for connection to a flange in accordance with EN 1092-1, form A/B, type 11. If the flange dimensions or surface finish differ from this, additional measures must be taken, such as installing an adapter disc (see also table „Rubber bellow sealing profiles“ on page 125). Rubber expansion joints with PTFE lining are not suitable for absorbing vibrations. The bellows must not be painted or insulated at media temperatures >50 °C. Please also note the planning and installation instructions.